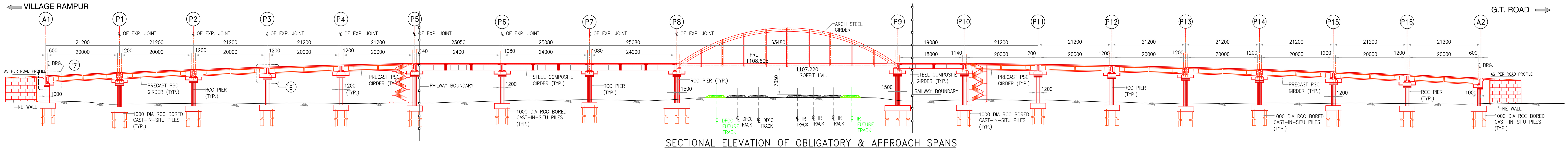


SECTIONAL ELEVATION OF OBLIGATORY & APPROACH SPANS

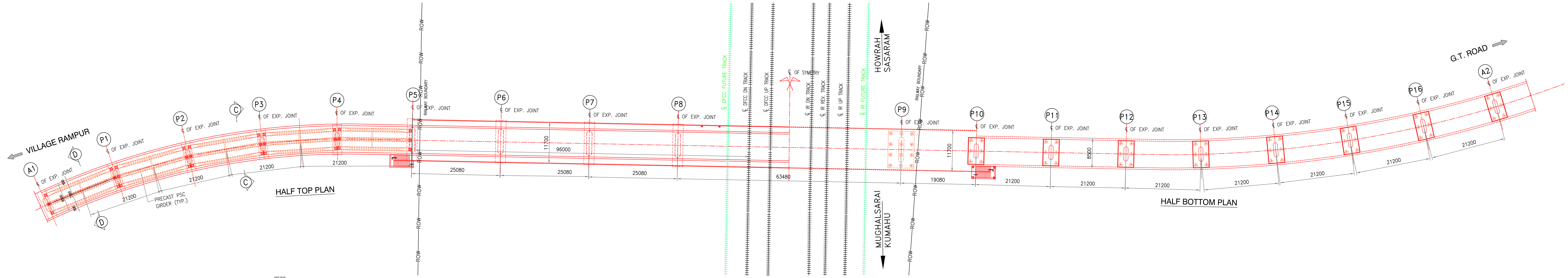


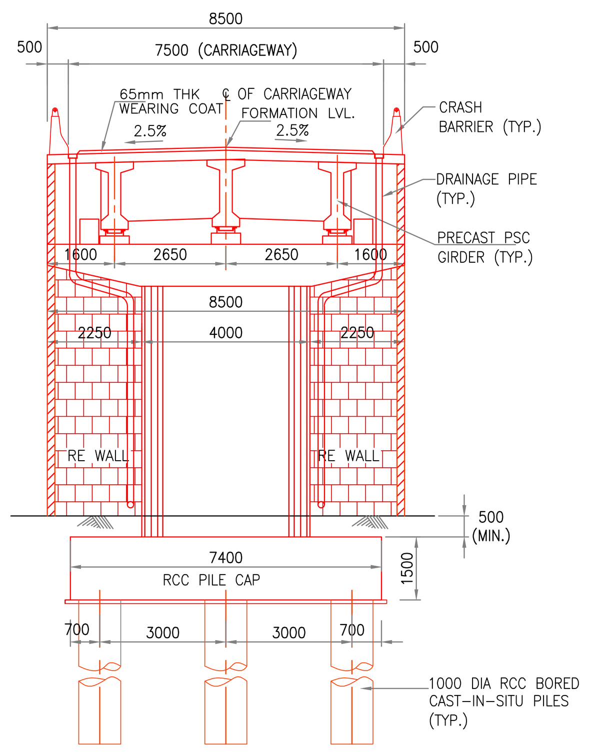


SECTION D–D

(SCALE 1:100)

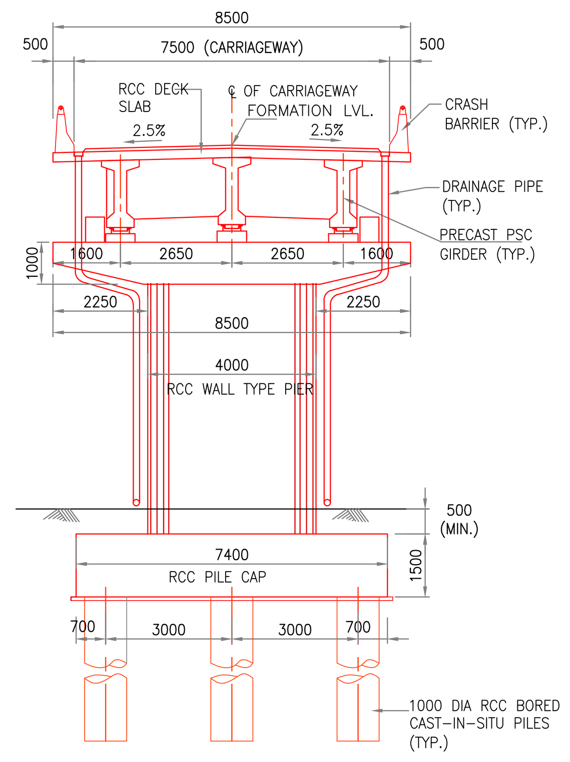


SECTION C–C

(SCALE 1:100)

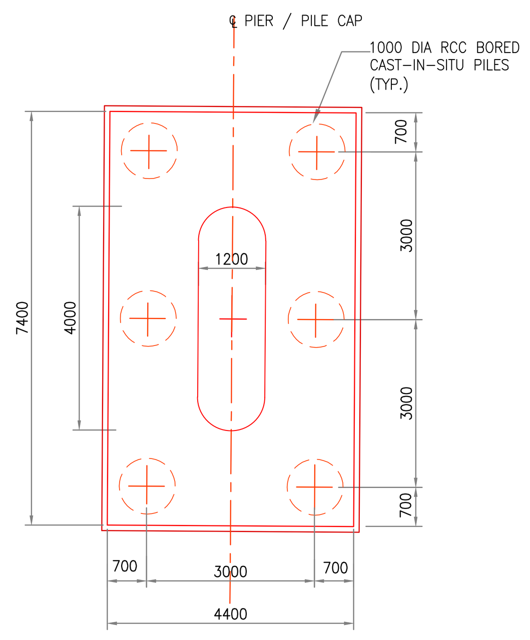


TYPICAL PLAN OF PILE GROUP

(AT VIADUCT SPAN FOR PIER P1 TO P4, & P11 TO P16)

(SCALE 1:100)

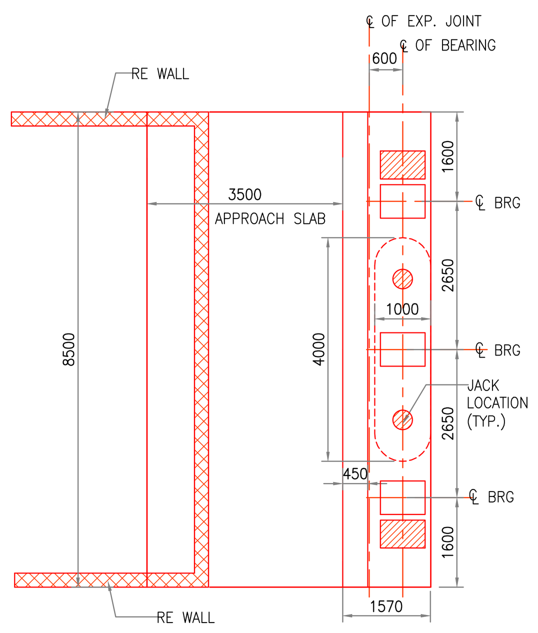


ABUTMENT CAP PLAN A1 & A2

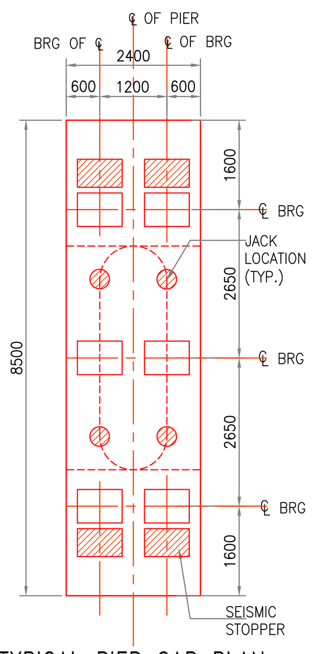


TYPICAL PIER CAP PLAN (FOR PSC GIRDER SPAN)

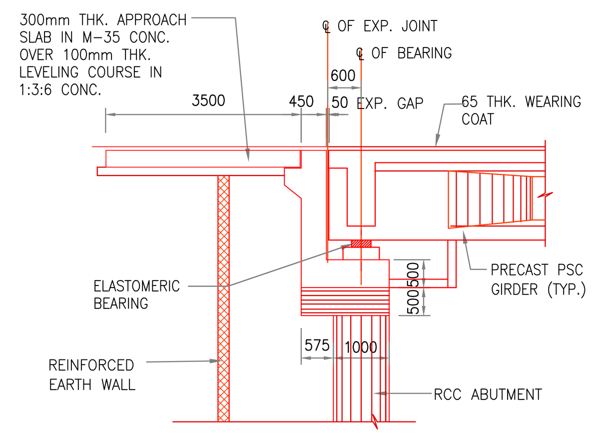


DETAIL–'7'

(AT A1 & A2)

SCALE 1:75

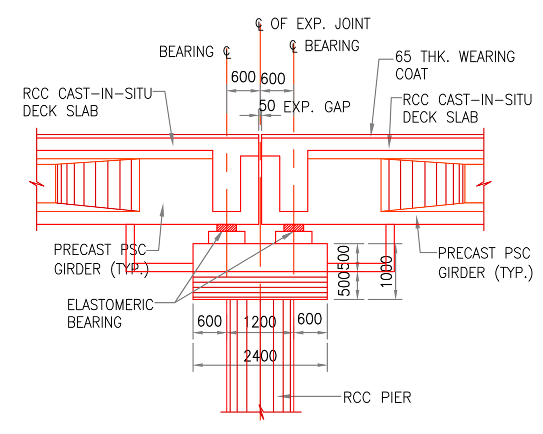


DETAIL–'6'

(AT PIER PIER P1 TO P4 & P11 TO P16)

SCALE 1:75

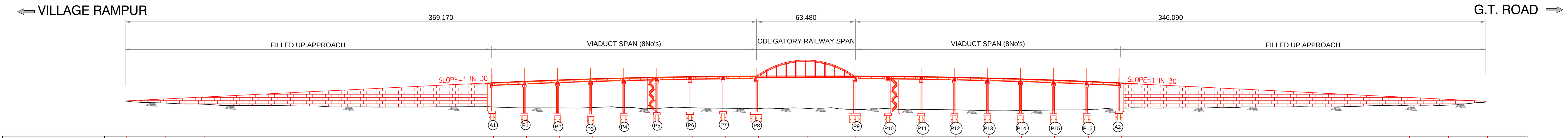


| CHAINAGE (Km) | F.R.L. (m) | GROUND LEVEL (m) |
|---|---|---|
| -400.910 | 98.740 | 98.740 |
| -375.910 | 98.950 | 98.735 |
| -350.910 | 99.570 | 98.832 |
| -212.980 | 104.170 | 97.896 |
| -191.780 | 104.880 | 98.174 |
| -170.580 | 105.580 | 98.065 |
| -149.380 | 106.290 | 97.999 |
| -128.180 | 107.00 | 97.962 |
| -106.980 | 107.630 | 97.914 |
| -81.900 | 108.170 | 97.789 |
| -56.820 | 108.500 | 97.828 |
| -31.740 | 108.605 | 97.445 |
| 0.000 | 108.605 | HIGHEST RAIL TOP LVL 100.170 |
| 31.740 | 108.605 | 97.792 |
| 50.820 | 108.510 | 97.892 |
| 72.020 | 108.260 | 97.738 |
| 93.220 | 107.830 | 97.778 |
| 114.220 | 107.210 | 97.343 |
| 135.620 | 106.250 | 97.542 |
| 156.820 | 105.800 | 98.005 |
| 178.020 | 105.090 | 97.784 |
| 199.220 | 104.380 | 97.653 |
| 327.830 | 100.110 | 98.068 |
| 352.830 | 99.490 | 97.970 |
| 377.830 | 99.280 | 99.280 |

VERTICAL PROFILE: L=50.000m VALLEY CURVE; L=222.730m SLOPE=1 IN 30; L=96.440m SUMMIT CURVE; G=0.000 L=63.480m; L=82.680m SUMMIT CURVE; L=213.410m SLOPE=1 IN 30; L=50.000m VALLEY CURVE

HORIZONTAL PROFILE: STRAIGHT LENGTH= 183.940m; CURVE S1 (R=202.00m) CURVE LENGTH= 92.320m; STRAIGHT LENGTH= 124.065m; STRAIGHT LENGTH= 105.765m; CURVE LENGTH= 129.435m CURVE S2 (R=319.00m); STRAIGHT LENGTH= 142.075m

LONGITUDINAL ELEVATION INCLUDING FILLED UP PORTION

LEGEND
- PROPOSED WORK
- EXISTING WORK
- FUTURE WORK

DFCCIL DRG NO -----

| DESIGNATION | SIGNATURE | DESIGNATION | SIGNATURE |
|---|---|---|---|
| A.K. MISHRA CPM/DFCCIL | | CE RWD PATNA | |
| RAMESHWAR SINGH DY CPM/ENGG/DFCCIL | | EXECUTIVE ENGINEER (RWD-1 WORK DIVISION SASARAM) | |
| APM/DPM/ENGG/DFCCIL | | SUPERITENDING ENGINEER (RWD-1 WORK DIVISION SASARAM) | |
| DFCCIL/MGS | | STATE GOVT. BIHAR | |

PANKAJ SAXENA DRM
ATUL KUMAR Sr. DEN/Co-ORD/MGS
RUPES KUMAR Sr. DOM/MGS
ALOK KUMAR Sr. DEN-II/MGS
B.K. YADAV Sr. DSTE/MGS
OM SHANKAR PRASAD Sr. DEE/TRD/MGS
MGS DIVISION

| DATE :- | REV. NO. | REVISION |
|---|---|---|

EAST CENTRAL RAILWAY | MGS DIVISION

डेडीकेटेड फ्रेट कॉरीडोर

DEDICATED FREIGHT CORRIDOR CORPORATION OF INDIA LIMITED
(A GOVERNMENT OF INDIA ENTERPRISE)

PROJECT :
GAD FOR APPROACH PORTION OF ROB AT LC No. 45
AT Km 578/9-11

TITLE
GENERAL ARRANGEMENT DRAWING
OF ROB AT LC No. 45

| DEALT BY: A.K.GUPTA | DATE : 16.05.18 | DRG. NO. PPC/DFCC/ROB/LC45/ GAD/01 (Sheet 2 Of 2) | REV. R0 |
|---|---|---|---|
| DRAWN BY: A.S.RAWAT | SCALE:-AS SHOWN | | |

CONSULTANTS :
PARK PROJECTS CONSULTANCY PVT.LTD.
NEW DELHI