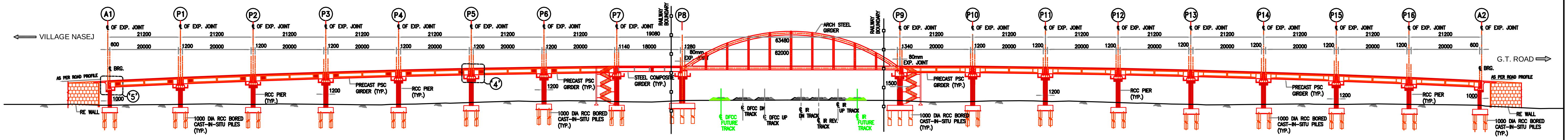

SECTIONAL ELEVATION OF OBLIGATORY & VIADUCT SPANS

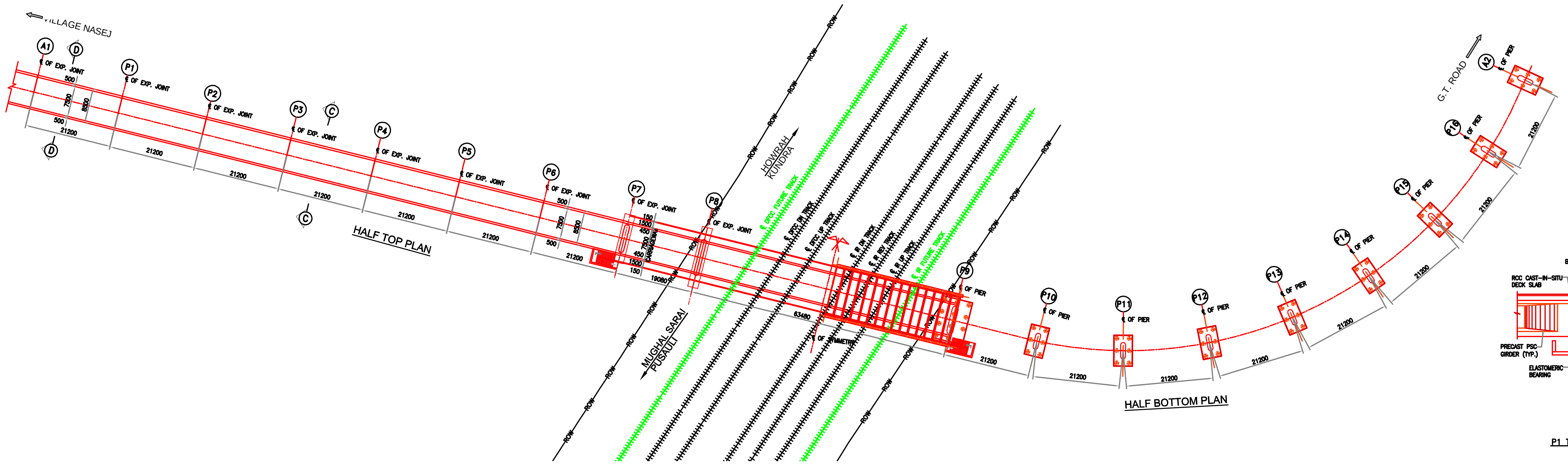

HALF TOP PLAN

HALF BOTTOM PLAN

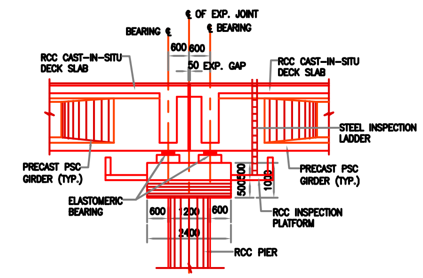

DETAIL-'4'

P1 TO P6 & P10 TO P16

SCALE 1:75

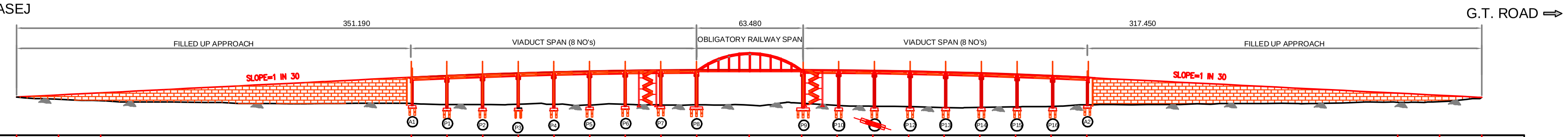

CHAINAGE (m)	F.R.L. (m)	GROUND LEVEL (m)
-382.930	99.030	99.000
-357.930	99.240	98.800
-332.930	99.860	98.233
-199.220	104.320	97.341
-178.020	105.030	97.590
-156.820	105.730	97.550
-135.620	106.440	97.430
-114.420	107.150	97.560
-93.220	107.760	97.500
-72.020	108.200	97.467
-50.820	108.450	97.567
-31.740	108.525	97.600
0.000	108.525	MAXIMUM RAIL TOP LVL.100.140
31.740	108.525	97.654
52.940	108.440	97.629
74.140	108.170	97.610
95.340	107.730	97.627
116.540	107.110	97.691
137.740	106.410	97.840
158.940	105.700	97.884
180.140	104.990	97.913
201.340	104.290	97.769
299.190	101.020	100.055
324.190	100.040	100.225
349.190	100.190	100.190

VERTICAL PROFILE: L=50.000m VALLEY CURVE; L=214.610m SLOPE=1 IN 30; L=82.680m SUMMIT CURVE; G=0.000 L=63.480m; L=84.800m SUMMIT CURVE; L=182.650m SLOPE=1 IN 30; L=50.000m VALLEY CURVE

HORIZONTAL PROFILE: STRAIGHT LENGTH=218.510m; CURVE S1 (R=284.000m) CURVE LENGTH= 21.600m; STRAIGHT LENGTH=249.220m; STRAIGHT LENGTH= 52.940m; CURVE S2 (R=105.000m) CURVE LENGTH= 138.000m; STRAIGHT LENGTH= 182.650m

LONGITUDINAL ELEVATION INCLUDING FILLED UP PORTION

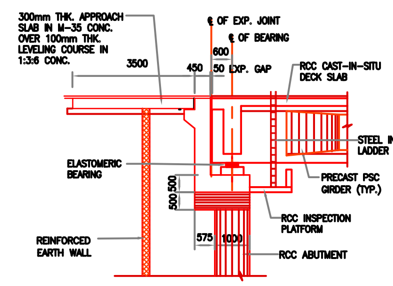

DETAIL-'5'

(AT A1 & A2)

SCALE 1:75

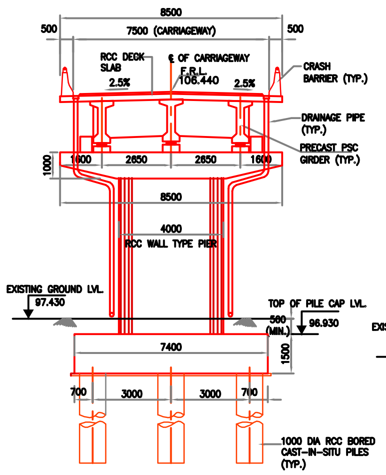

SECTION C-C

(SCALE 1:100)

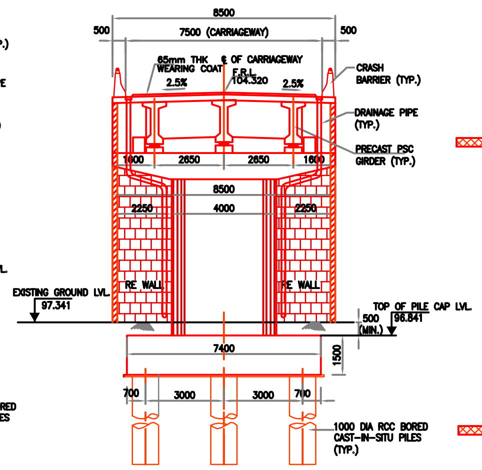

SECTION D-D

(SCALE 1:100)

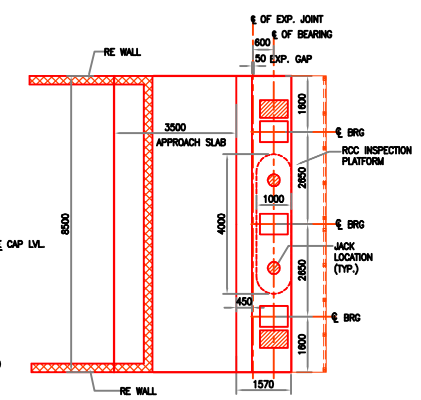

ABUTMENT CAP PLAN A1 & A2

SCALE 1:75

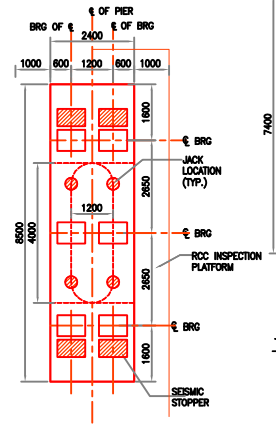

TYPICAL PIER CAP PLAN

P1 TO P6 & P10 TO P16

SCALE 1:75

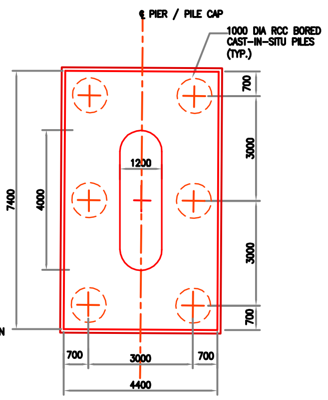

TYPICAL PLAN OF PILE GROUP

(AT VIADUCT SPAN)

(SCALE 1:100)

LEGEND

- PROPOSED WORK
- EXISTING WORK
- FUTURE WORK

DESIGNATION	SIGNATURE	DESIGNATION	SIGNATURE				
A.K. MISHRA CPM/DFCCIL		CE RWD PATNA		PANKAJ SAXENA DRM		CBE	
RAMESHWAR SINGH DY CPM/ENGG/DFCCIL		EXECUTIVE ENGINEER (RWD-1 WORK DIVISION SASARAM)		ATUL KUMAR Sr. DEN/Co-ORD/MGS		MUKESH KUMAR DY CE/BR/D	
APM/ENGG/DFCCIL		SUPERITENDING ENGINEER (RWD-1 WORK DIVISION SASARAM)		RUPES KUMAR Sr. DOM/MGS		M.A RAHMAN AEN/BR/D	
				ALOK KUMAR Sr. DEN-II/MGS			
				B.K. YADAV Sr. DSTE/MGS			
				OM SHANKAR PRASAD Sr. DEE/TRD/MGS			
SSE/W/DOS / SR.ADEN/DOS / DFCCIL/MGS		STATE GOVT. BIHAR		MGS DIVISION		HQ ECR HJP	

CE'S DRG NO:-

DRM/MGS/PLAN NO:-

DFCCIL DRG NO:-

DATE :-	REV. NO.	REVISION

EAST CENTRAL RAILWAY | MGS DIVISION

DEDICATED FREIGHT CORRIDOR CORPORATION OF INDIA LIMITED
(A GOVERNMENT OF INDIA ENTERPRISE)

PROJECT :
PROPOSED ROB IN-LIEU OF LC 54 AT Km. 603/17-19 BETWEEN KUNDRA - PUSAULI STATION IN MUGHALSARAI - GAYA SECTION AND ROAD Km. ________ ON VILLAGE ROAD BETWEEN G.T. ROAD TO NASEJ VILLAGE

TITLE
GENERAL ARRANGEMENT DRAWING
OF ROB AT LC NO. 54

DEALT BY: A.K.GUPTA	DATE : 18.07.2018	DRG. NO.	REV.
DRAWN BY: A.S.RAWAT	SCALE:-AS SHOWN	PPC/DFCC/ROB/LC54 GAD/01 (Sheet 2 Of 2)	R0

CONSULTANTS :
PARK PROJECTS CONSULTANCY PVT.LTD.
NEW DELHI